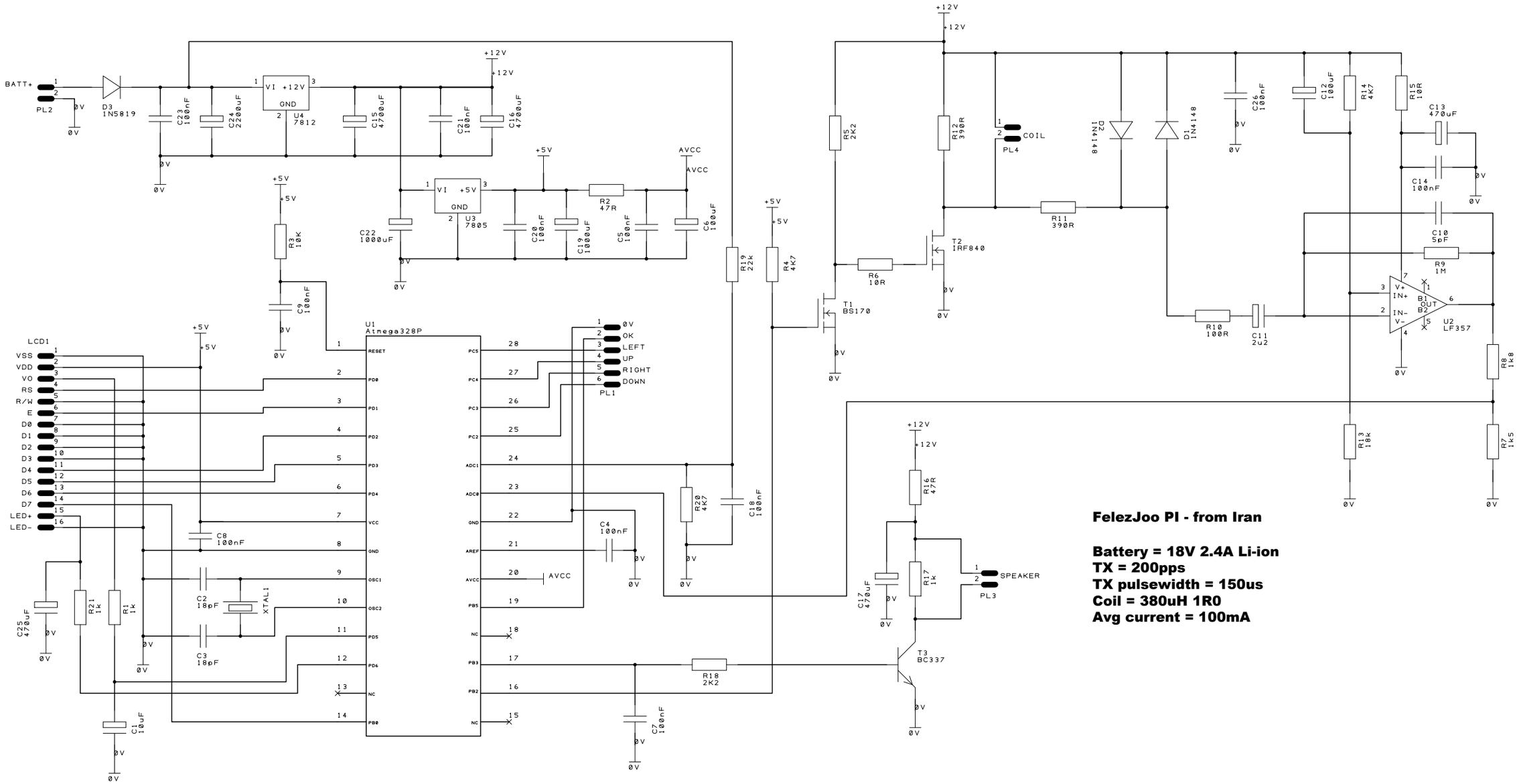

FelezJoo PI - from Iran

Battery = 18V 2.4A Li-ion
TX = 200pps
TX pulsewidth = 150us
Coil = 380uH 1R0
Avg current = 100mA