MODEL VN-300 SCHEMATIC DIAGRAM

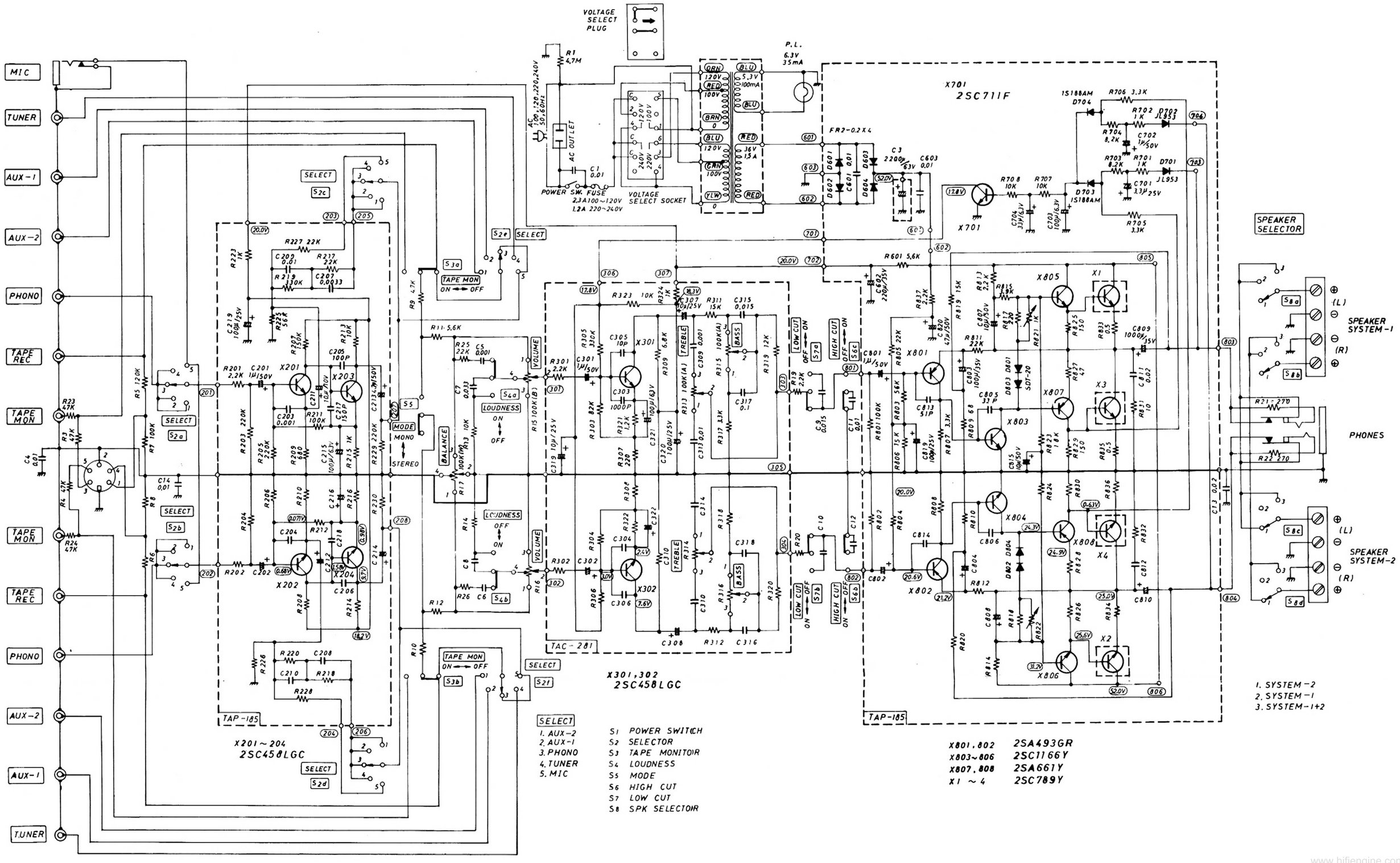

www.hifiengine.com