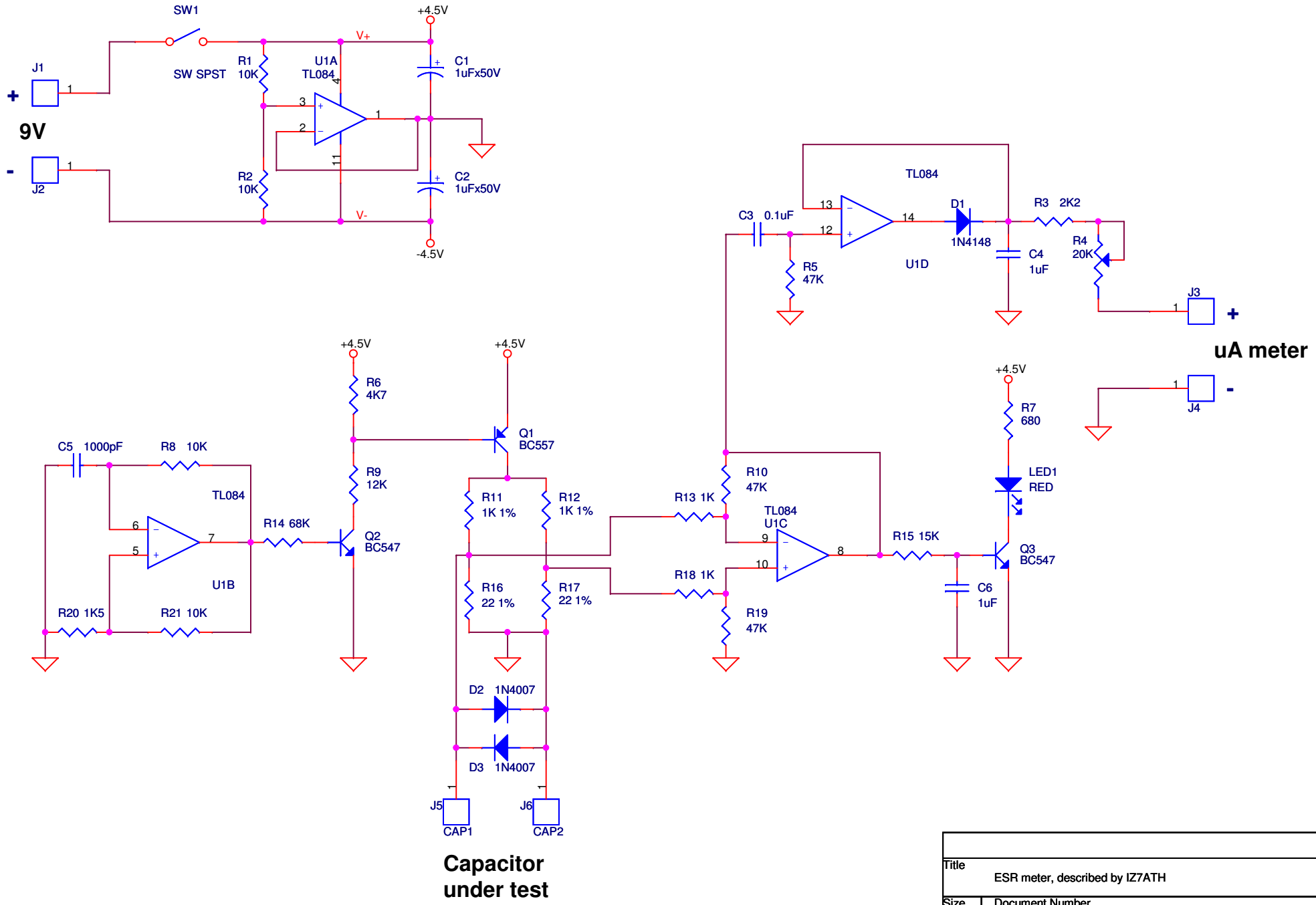

Title	ESR meter, described by IZ7ATH	
Size A4	Document Number <Doc>	Rev <RevCo
Date: Friday, June 29, 2007	Sheet 1 of 1	