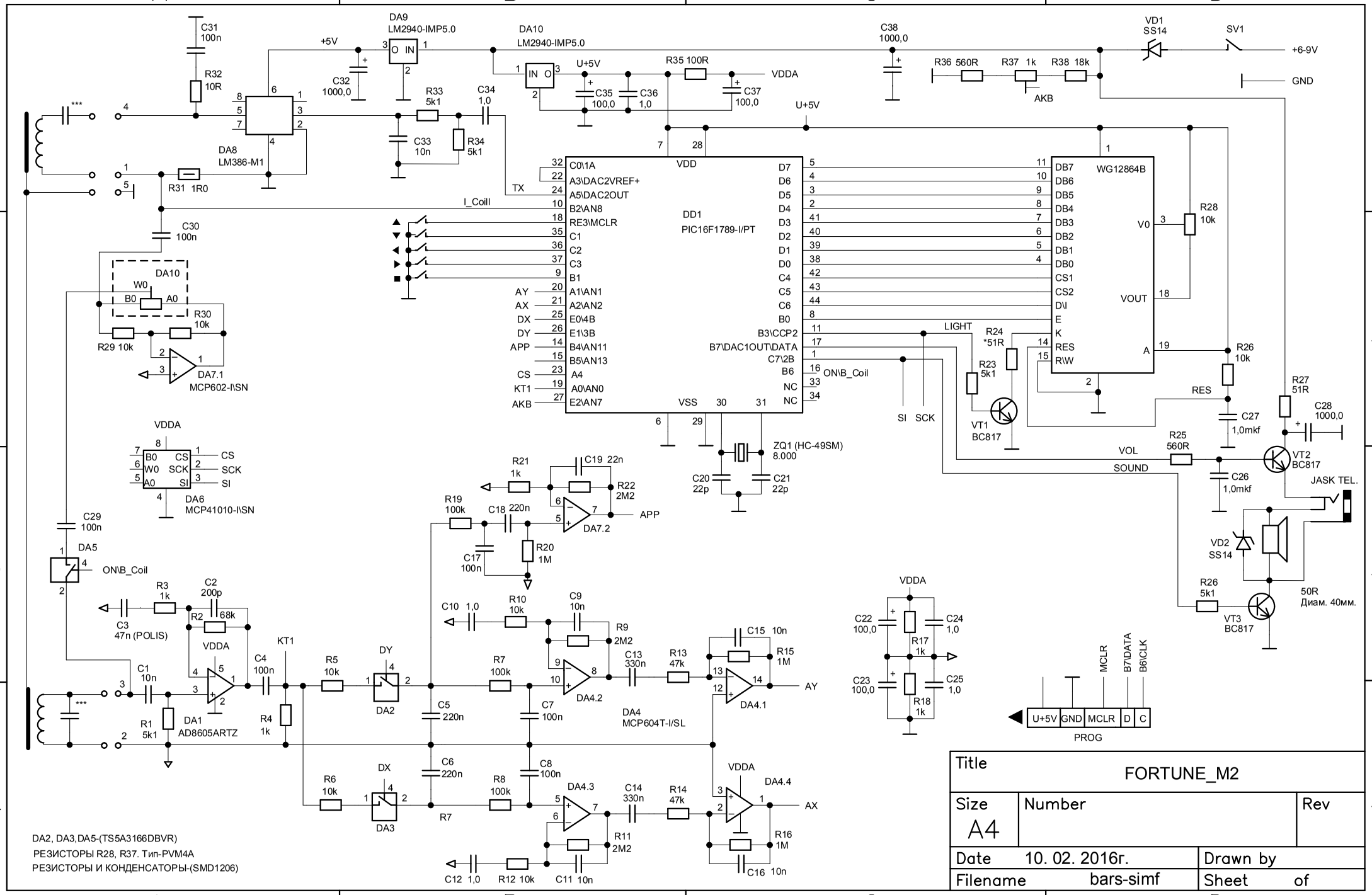

DA9
LM2940-IMP5.0
DA10
LM2940-IMP5.0
+5V
U+5V
VDDA
C31
100n
R32
10R
C32
1000,0
R33
5k1
C34
1,0
C33
10n
R34
5k1
C35
100,0
C36
1,0
R35 100R
C37
100,0
C38
1000,0
R36 560R
R37 1k
R38 18k
AKB
VD1
SS14
SV1
+6-9V
GND
DA8
LM386-M1
R31 1R0
C30
100n
DA10
W0
B0
A0
R30
10k
R29 10k
DA7.1
MCP602-I\SN
DD1
PIC16F1789-I/PT
C0\1A
A3\DAC2VREF+
A5\DAC2OUT
B2\AN8
RE3\MCLR
C1
C2
C3
B1
A1\AN1
A2\AN2
E0\4B
E1\3B
B4\AN11
B5\AN13
A4
A0\AN0
E2\AN7
VDD
VSS
D7
D6
D5
D4
D3
D2
D1
D0
C4
C5
C6
B0
B3\CCP2
B7\DAC1OUT\DATA
C7\2B
B6
NC
NC
TX
I_CoilI
AY
AX
DX
DY
APP
CS
KT1
AKB
ON\B_Coil
WG12864B
DB7
DB6
DB5
DB4
DB3
DB2
DB1
DB0
CS1
CS2
D\I
E
K
RES
R\W
V0
VOUT
A
R28
10k
R26
10k
LIGHT
R24
*51R
R23
5k1
VT1
BC817
SI
SCK
RES
C27
1,0mkf
R27
51R
C28
1000,0
VOL
SOUND
R25
560R
C26
1,0mkf
VT2
BC817
JASK TEL.
VD2
SS14
R26
5k1
VT3
BC817
50R
Диам. 40мм.
ZQ1 (HC-49SM)
8.000
C20
22p
C21
22p
VDDA
DA6
MCP41010-I\SN
CS
SCK
SI
C29
100n
DA5
ON\B_Coil
R21
1k
C19 22n
R22
2M2
DA7.2
APP
R19
100k
C18 220n
C17
100n
R20
1M
R3
1k
C2
200p
C3
47n (POLIS)
R2 68k
VDDA
C1
10n
R1
5k1
DA1
AD8605ARTZ
C4
100n
R4
1k
KT1
R5
10k
DY
DA2
C5
220n
C6
220n
C10 1,0
R10
10k
C9
10n
R9
2M2
R7
100k
DA4.2
C13
330n
R13
47k
C15 10n
R15
1M
DA4.1
AY
DA4
MCP604T-I/SL
C7
100n
C8
100n
R6
10k
DX
DA3
R7
R8
100k
DA4.3
C14
330n
R14
47k
VDDA
DA4.4
AX
R11
2M2
R16
1M
C16 10n
C12 1,0
R12 10k
C11 10n
VDDA
C22
100,0
C24
1,0
R17
1k
C23
100,0
C25
1,0
R18
1k
MCLR
B7\DATA
B6\CLK
U+5V
GND
MCLR
D
C
PROG
DA2, DA3,DA5-(TS5A3166DBVR)
РЕЗИСТОРЫ R28, R37. Тип-PVM4A
РЕЗИСТОРЫ И КОНДЕНСАТОРЫ-(SMD1206)
Title
FORTUNE_M2
Size
A4
Number
Rev
Date
10. 02. 2016г.
Drawn by
Filename
bars-simf
Sheet
of