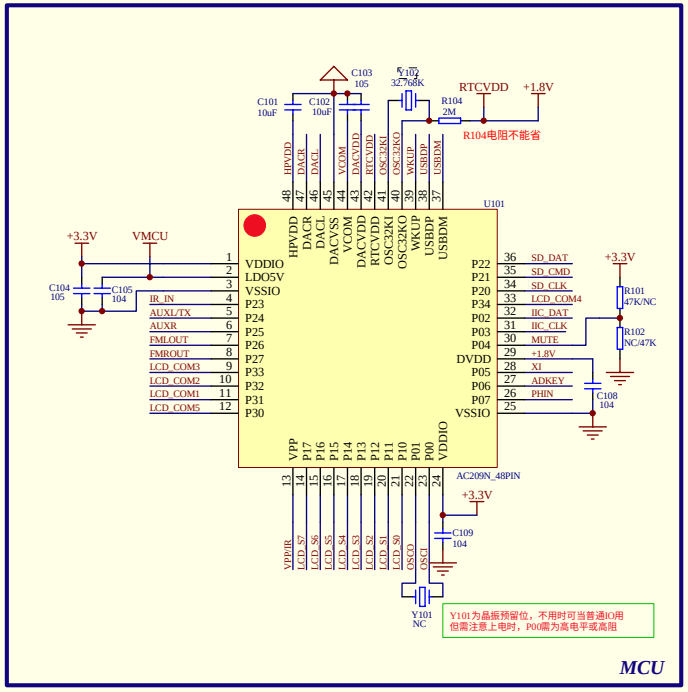

MCU

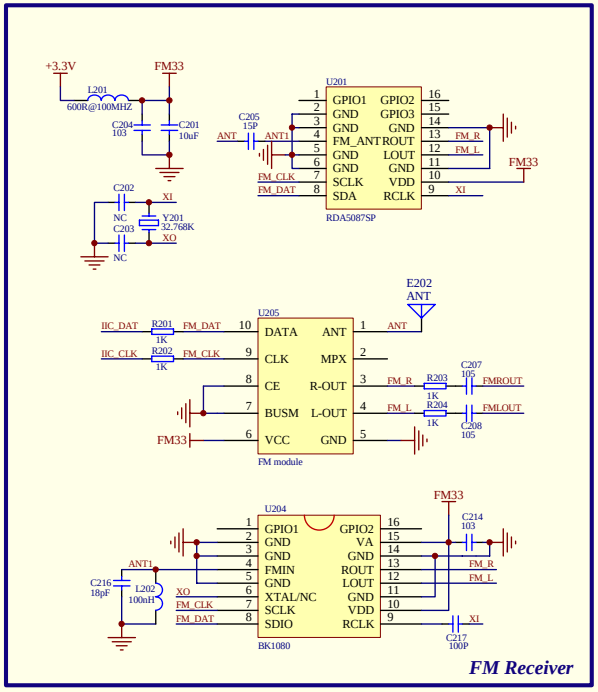

FM Receiver

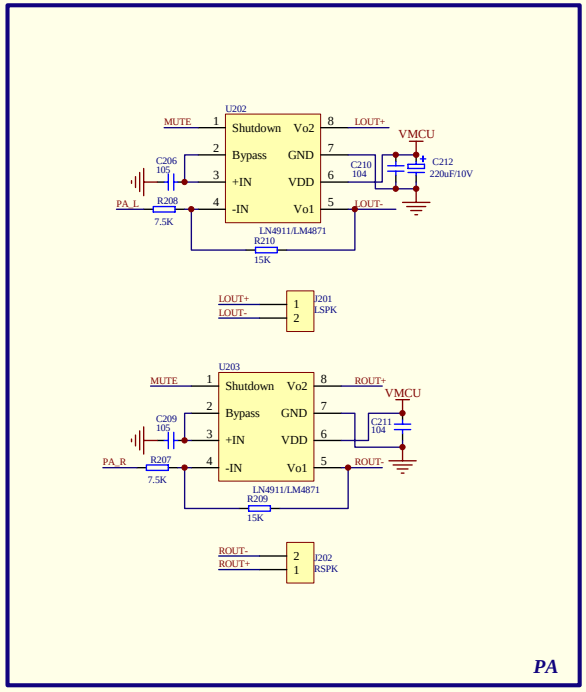

PA

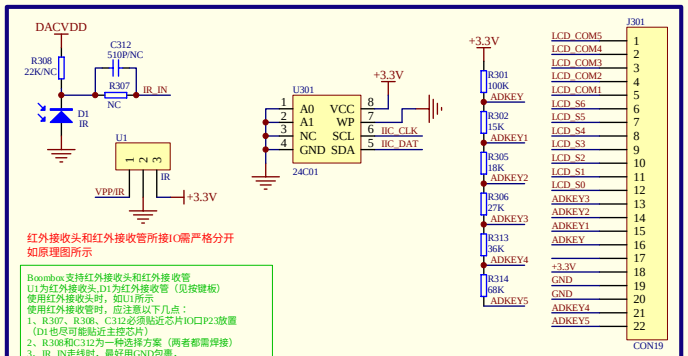

ADKEY、IR、E2prom、Interface

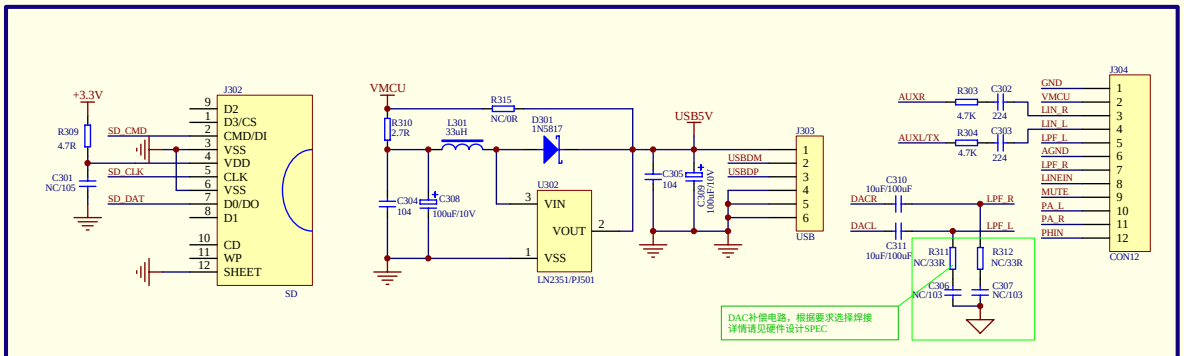

SD、USB、Interface

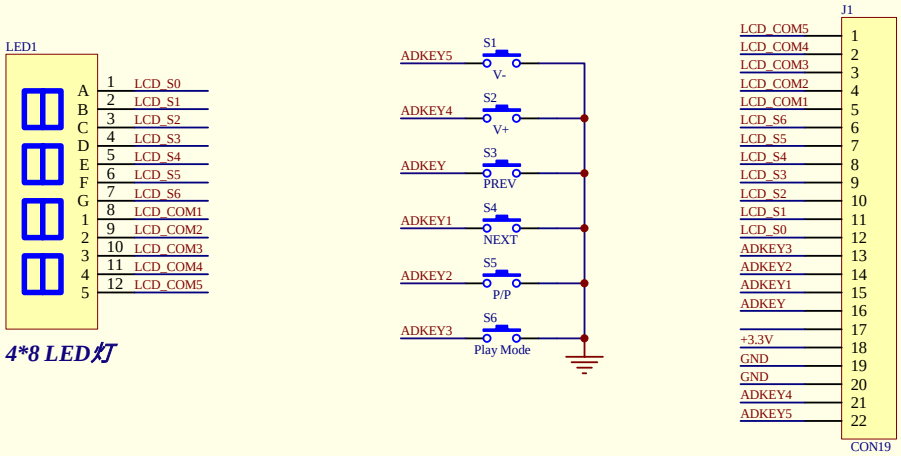
LED1
A
B
C
D
E
F
G
1
2
3
4
5
1 LCD_S0
2 LCD_S1
3 LCD_S2
4 LCD_S3
5 LCD_S4
6 LCD_S5
7 LCD_S6
8 LCD_COM1
9 LCD_COM2
10 LCD_COM3
11 LCD_COM4
12 LCD_COM5
4*8 LED灯
ADKEY5
S1
V-
ADKEY4
S2
V+
ADKEY
S3
PREV
ADKEY1
S4
NEXT
ADKEY2
S5
P/P
ADKEY3
S6
Play Mode
J1
LCD_COM5 1
LCD_COM4 2
LCD_COM3 3
LCD_COM2 4
LCD_COM1 5
LCD_S6 6
LCD_S5 7
LCD_S4 8
LCD_S3 9
LCD_S2 10
LCD_S1 11
LCD_S0 12
ADKEY3 13
ADKEY2 14
ADKEY1 15
ADKEY 16
17
+3.3V 18
GND 19
GND 20
ADKEY4 21
ADKEY5 22
CON19

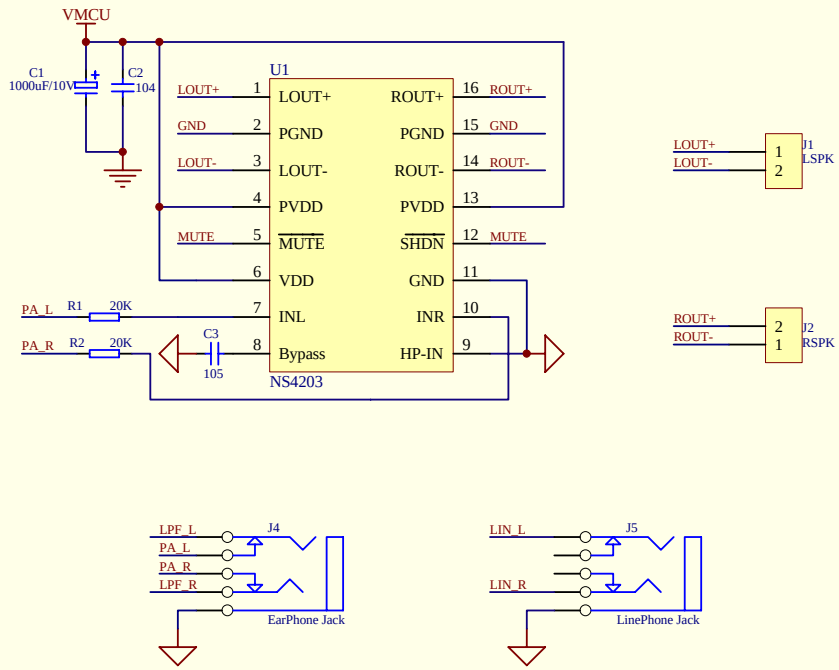

Sperker、EarPhone、LinePhone

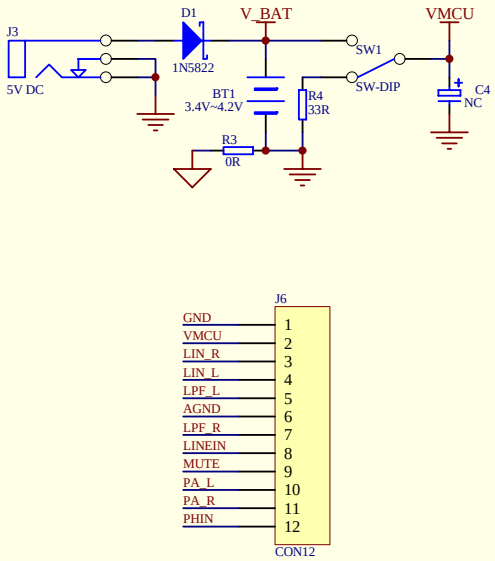

Power、MCU Interface