7021标案 原理图

Revision History

V1.0	Beta	2013-08-28
V1.1		2013-11-18

1、增加RGB屏多余数据线接地
2、在VGL前端增加CD5对地
3、增加DDR地址控制线排阻，
4、LP物料名称更改，
5、功放增加D类兼容，

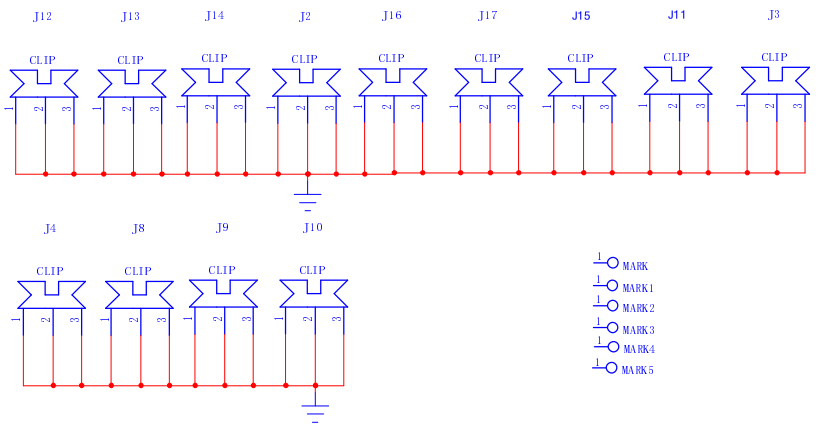

ATM7013	
File name:	
Sheet name: 1.VERSION	
Drawing No:	Version: V1.0
Drawn By:	Date:2013-12-2
Checked By:	Date:
Approved By:	Date:
Size: A3	Sheet: 1 of 12

7021原理框图

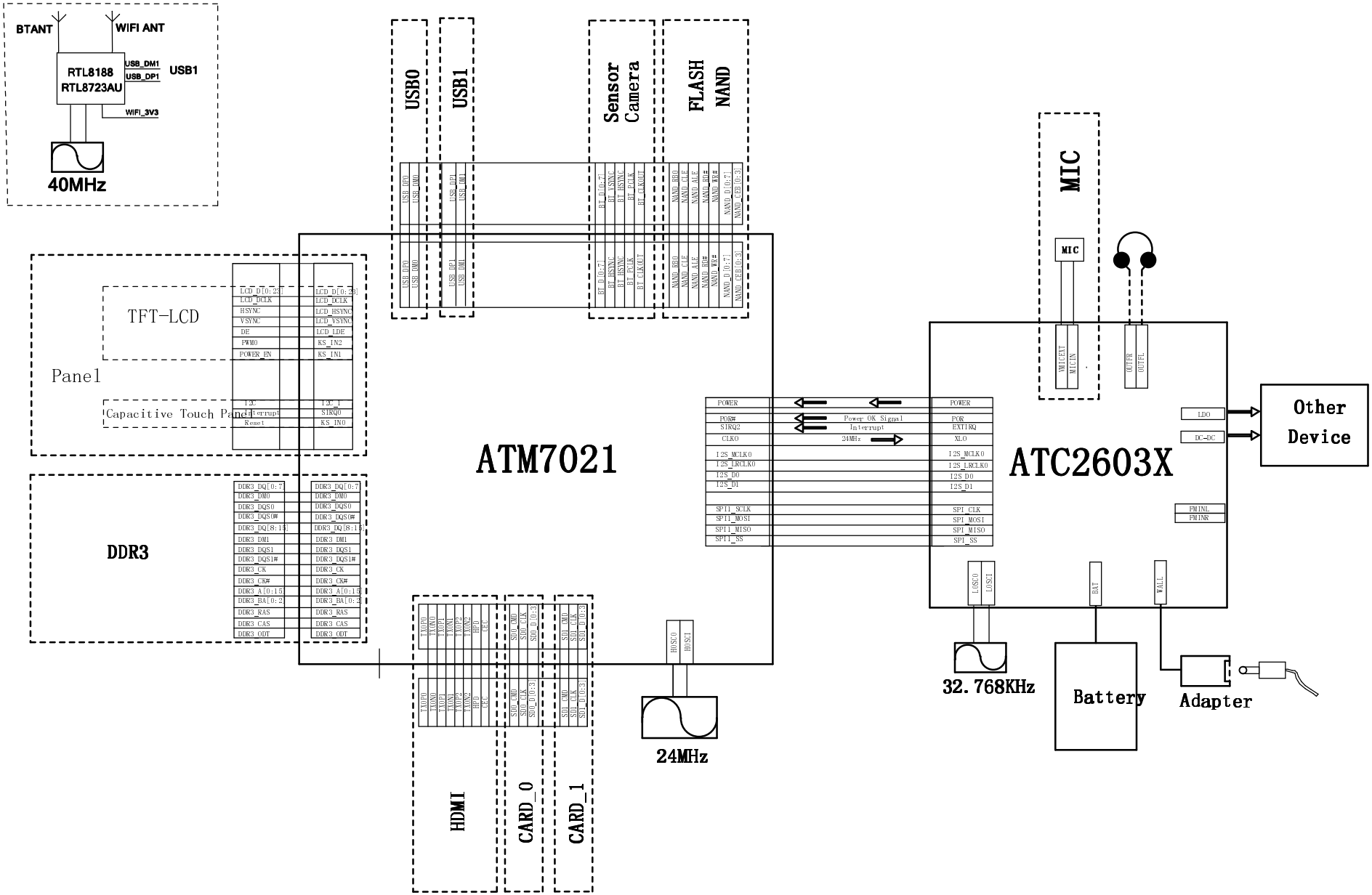
BTANT
WIFI ANT
RTL8188
RTL8723AU
USB_DM1
USB_DP1
USB1
WIFI_3V3
40MHz
USB0
USB1
Sensor
Camera
FLASH
NAND
MIC
TFT-LCD
Panel
Capacitive Touch Panel
DDR3
ATM7021
ATC2603X
Power OK Signal
Interrupt
24MHz
Other
Device
LDO
DC-DC
HDMI
CARD_0
CARD_1
24MHz
32.768KHz
Battery
Adapter

M2110 POWER TREE

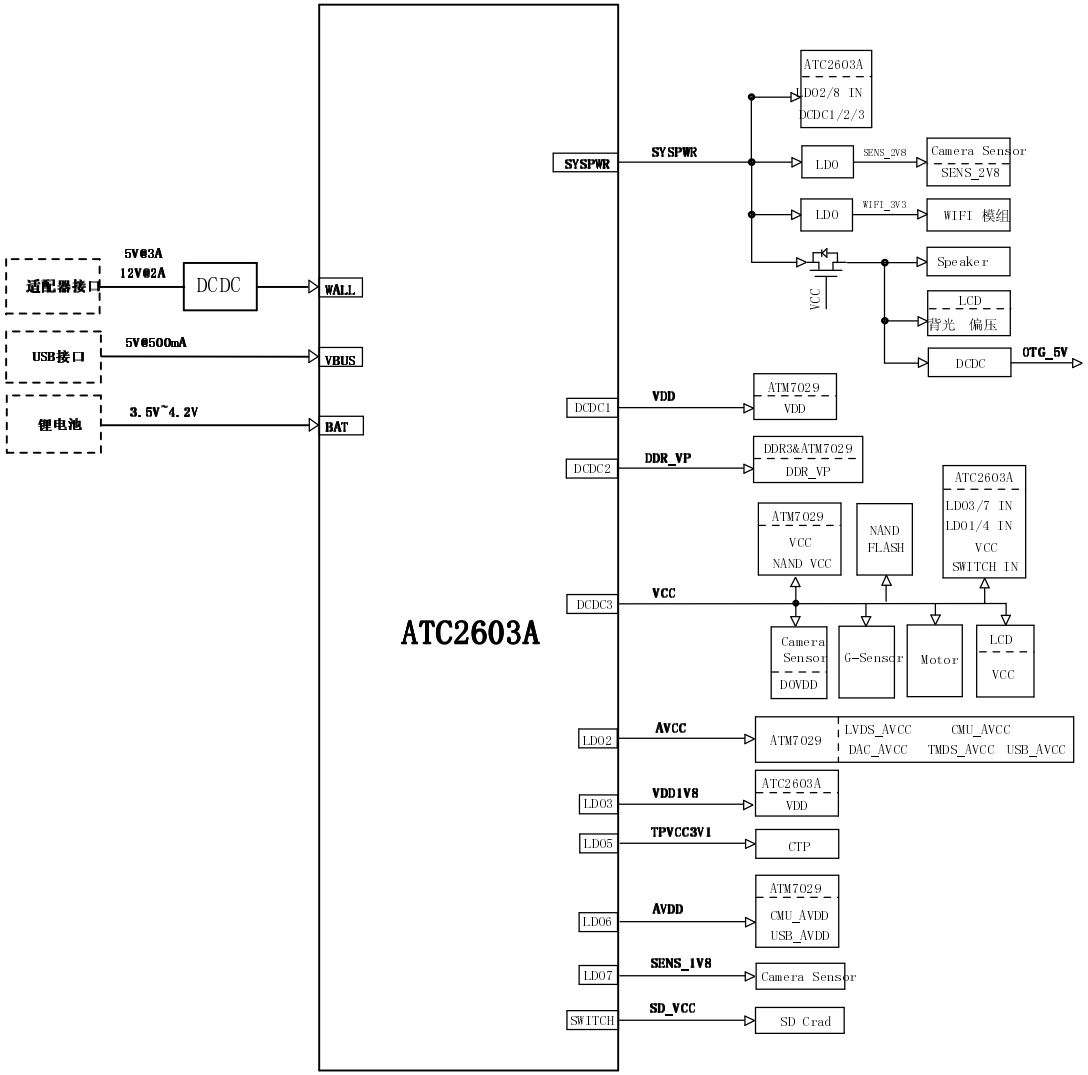

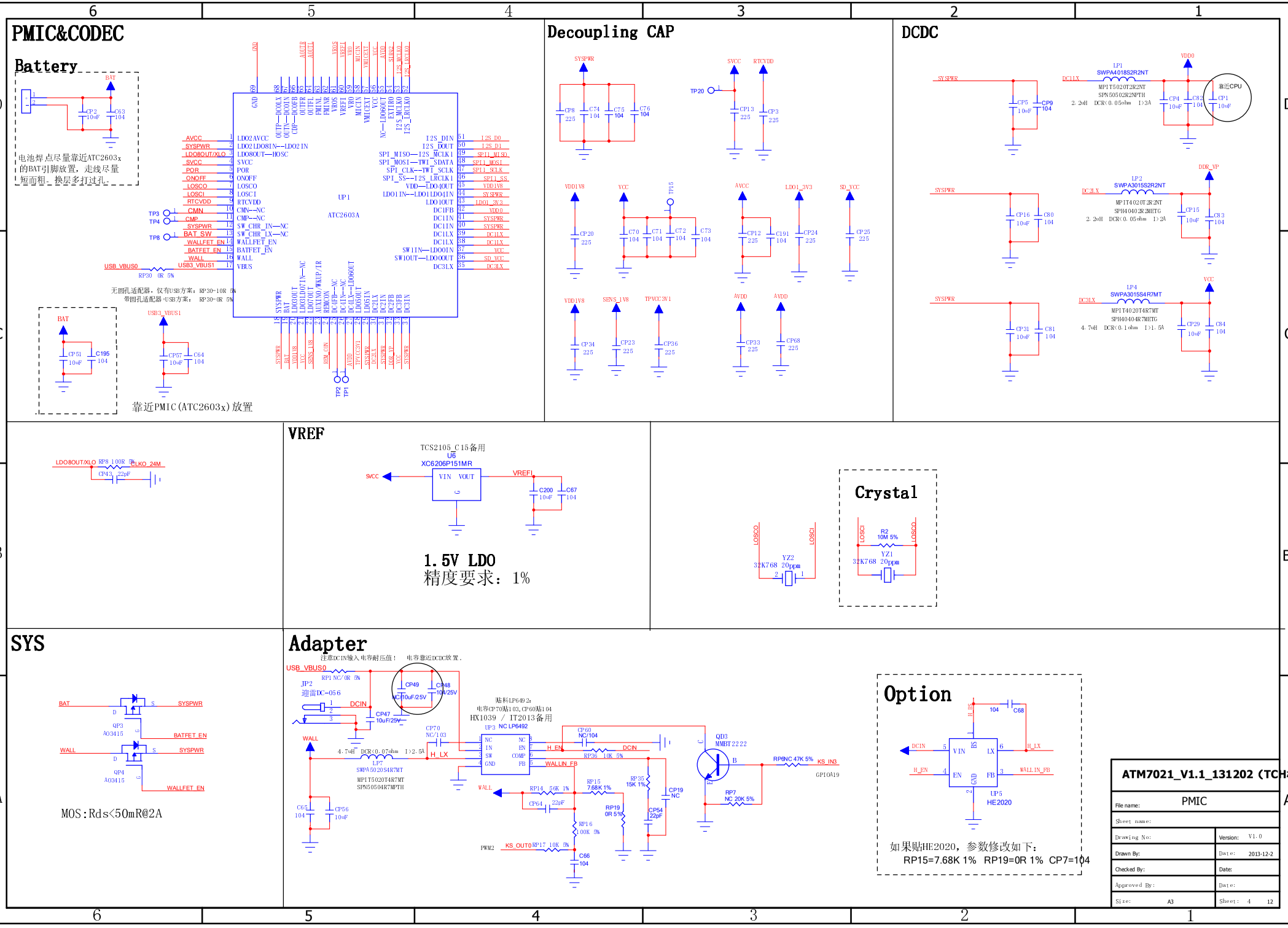
PMIC&CODEC
Battery
电池焊点尽量靠近ATC2603x的BAT引脚放置，走线尽量短而粗，换层多打过孔。
UP1
ATC2603A
USB_VBUS0
RP30 0R 5%
无圆孔适配器，仅有USB方案：RP30-10R 5%
带圆孔适配器+USB方案：RP30-0R 5%
靠近PMIC(ATC2603x)放置
Decoupling CAP
DCDC
LP1 SWPA4018S2R2NT
LP2 SWPA3015S2R2NT
LP4 SWPA3015S4R7MT
靠近CPU
VREF
TCS2105_C15备用
U6
XC6206P151MR
1.5V LDO
精度要求：1%
Crystal
YZ2 32K768 20ppm
YZ1 32K768 20ppm
SYS
MOS:Rds<50mR@2A
Adapter
注意DCIN输入电容耐压值！ 电容靠近DCDC放置。
JP2 迎雷DC-056
贴料LP6492a
电容CP70贴103,CP60贴104
HX1039 / IT2013备用
UP3 NC LP6492
LP7 SWPA5020S4R7MT
Option
UP5 HE2020
如果贴HE2020，参数修改如下：
RP15=7.68K 1% RP19=0R 1% CP7=104
ATM7021_V1.1_131202（TCH标案）.sch
File name: PMIC
Sheet name:
Drawing No:
Version: V1.0
Drawn By:
Date: 2013-12-2
Checked By:
Date:
Approved By:
Date:
Size: A3
Sheet: 4 12

CPU1

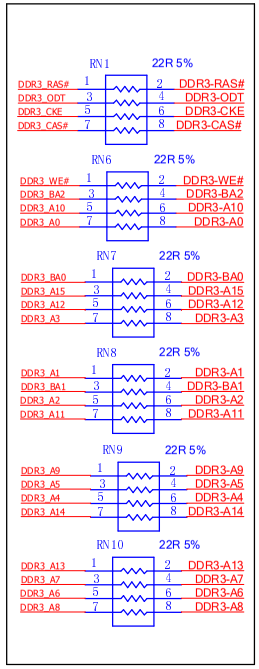

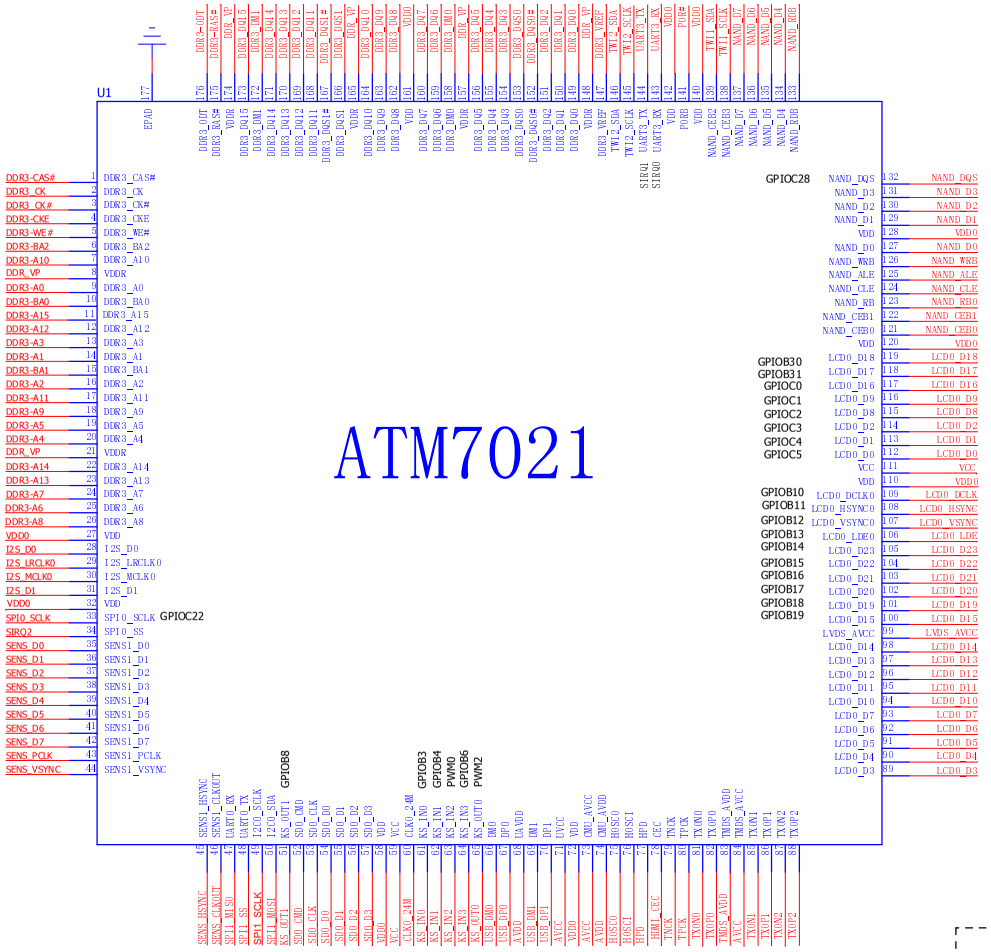

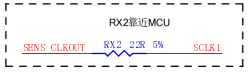

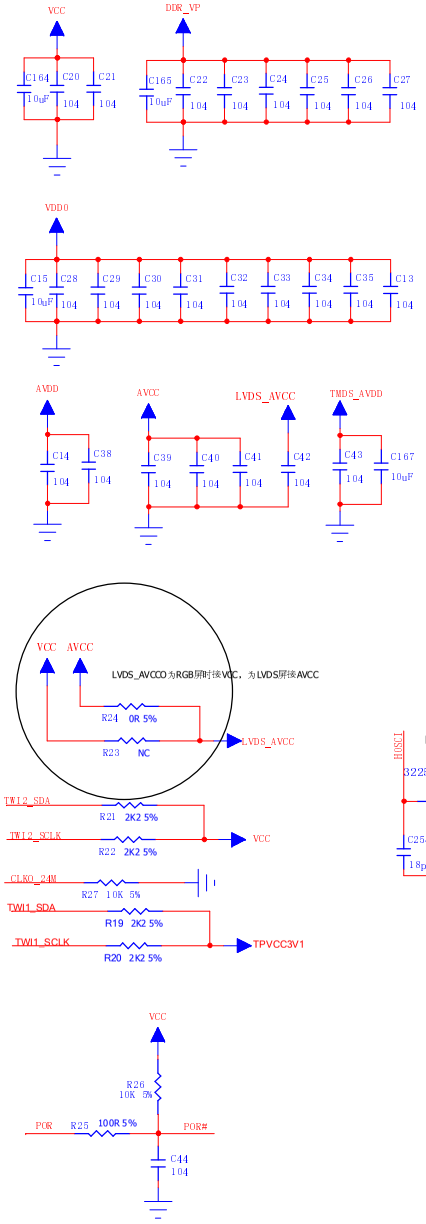

Pls Place near CPU

Title:	
Drawing No:	Version:
Drawn By:	Date:
Checked By:	Date:
Approved By:	Date:
Size A3	Sheet:

DDR3_2 X 8BIT

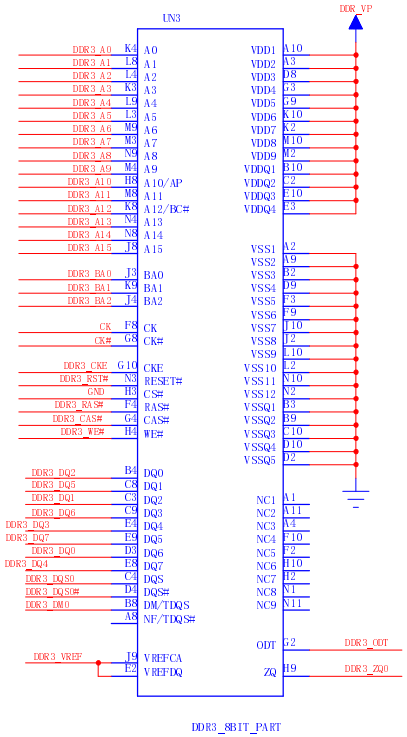

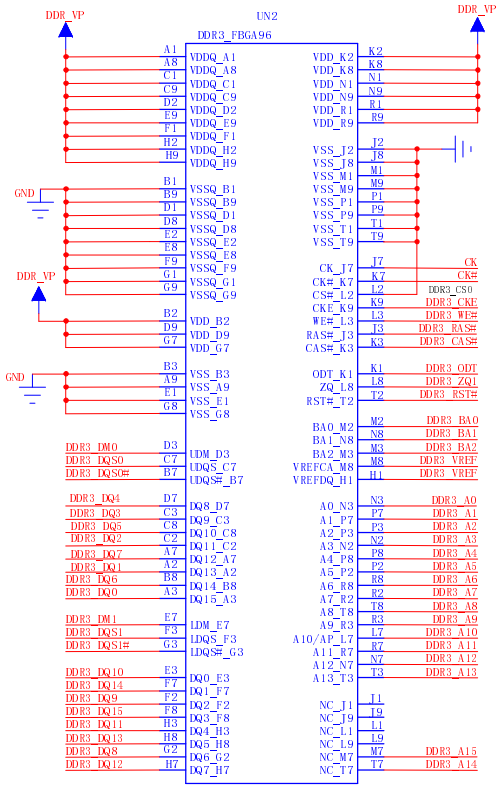

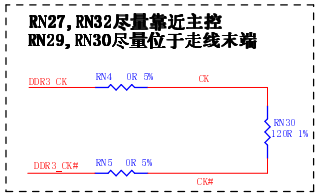

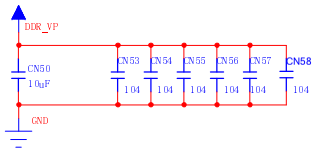

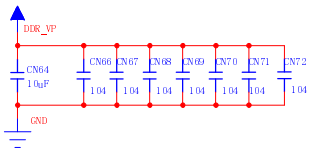

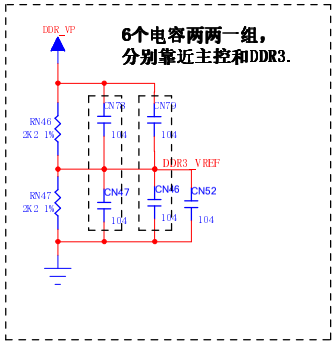

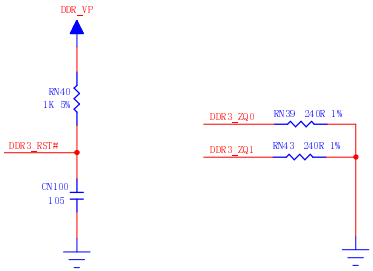

File name:	
Sheet name: 6.DDR3_4X8BIT	
Drawing No:	Version: V1.0
Drawn By:	Date: 2013-12-2
Checked By:	Date:
Approved By:	Date:
Size: A3	Sheet: 6 of 12

HDMI

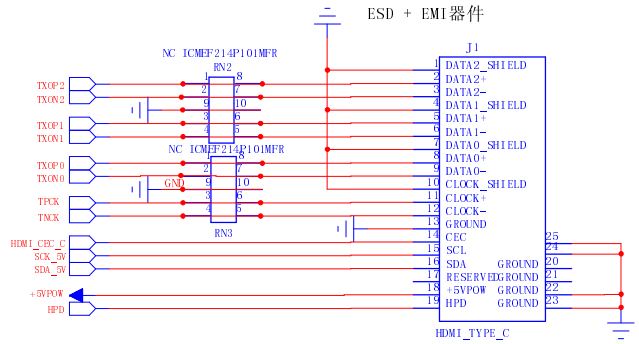

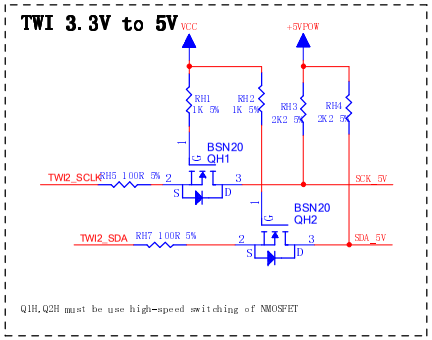

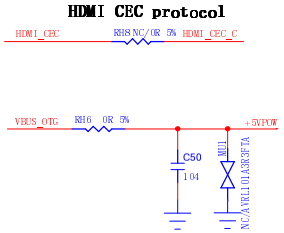

TF CARD

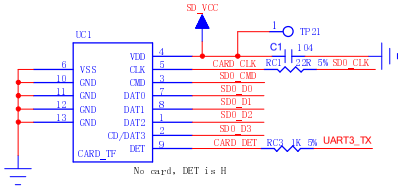

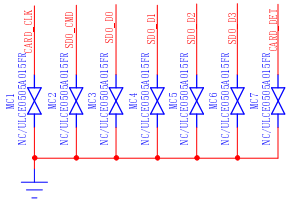

NANDFLASH (兼容tSD)

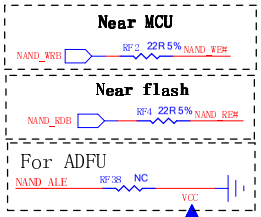

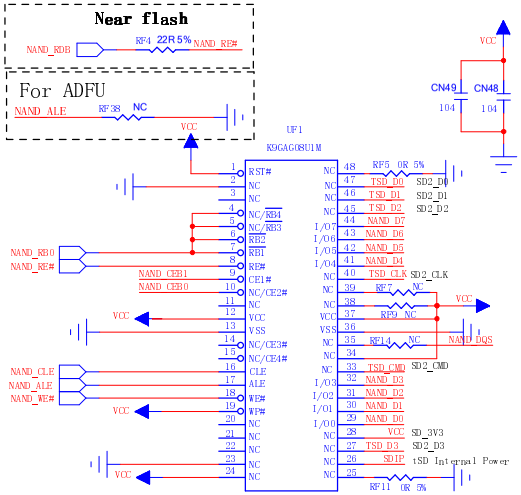

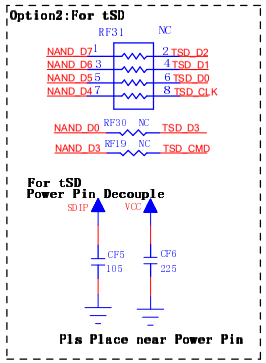

eMMC

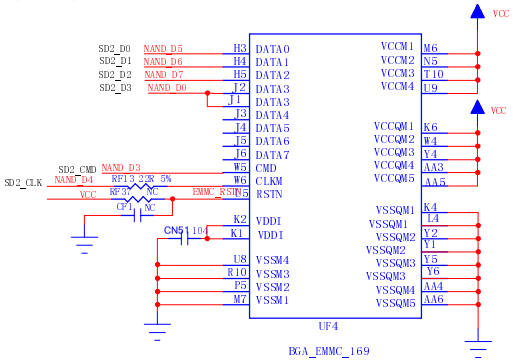

8. FLASH&CARD&HDMI	
File name:	
Sheet name:	
Drawing No:	Version: V1.0
Drawn By:	Date: 2013-12-2
Checked By:	Date:
Approved By:	Date:
Size: A3	Sheet: 7 12

USB

USB2.0 MiniAB

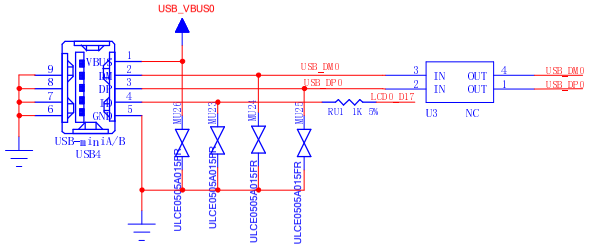

USB OTG Power

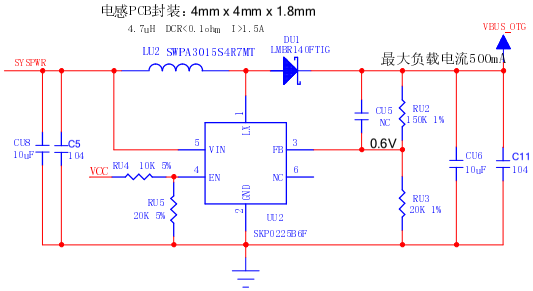

USB Current Switch

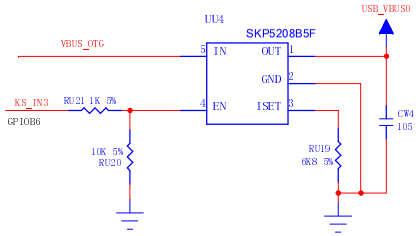

USB WIFI

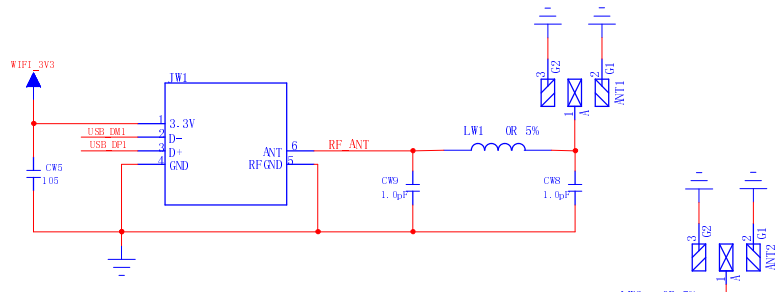

WIFI 3V3

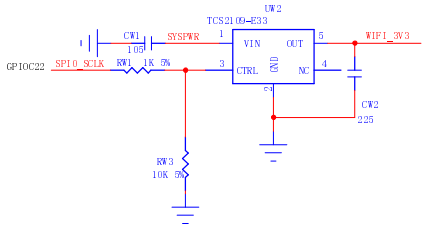

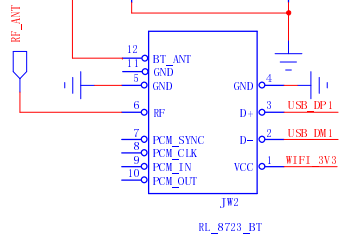

File name:	
Sheet name:	
Drawing No:	Version: V1.0
Drawn By:	Date:
Checked By:	Date:
Approved By:	Date:
Size: A3	Sheet: 8 12

EarPhone
非直驱

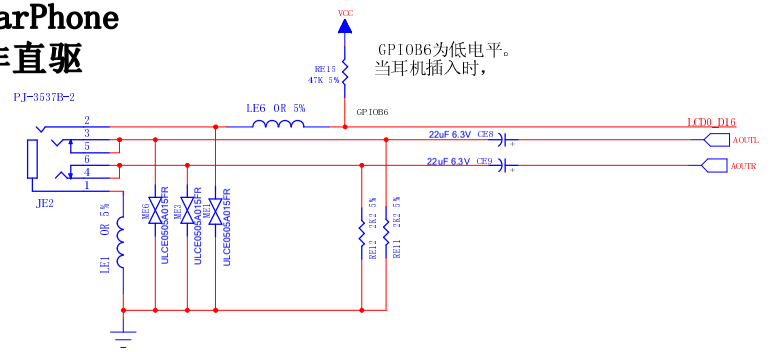

PA&SPEAKER

SPEAKER1

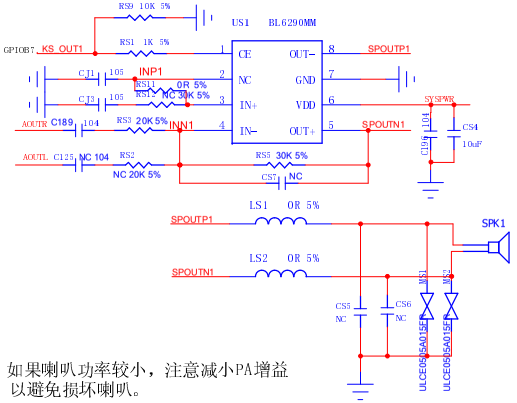

SPEAKER2

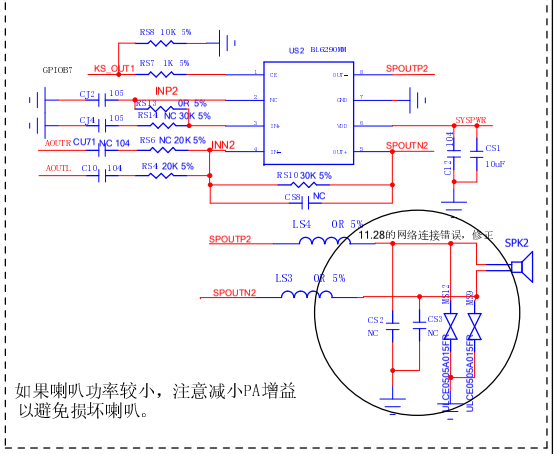

ADC KEY

按键功能定义已确定，请不要修改按键功能定义
例如，不需要MENU键，删除SK2即可，不可删除RK2

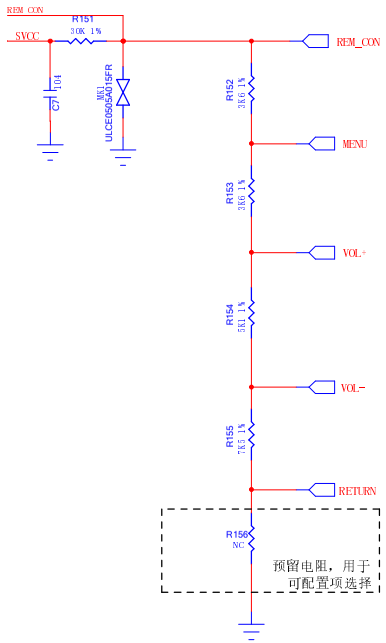

模具类型 / 按键定义	NO HDMI	HDMI
SW4	VOL-	VOL+
SW3	VOL-	VOL+
KS1	RETURN	ON/OFF

有HDMI时，KS10和R305不焊

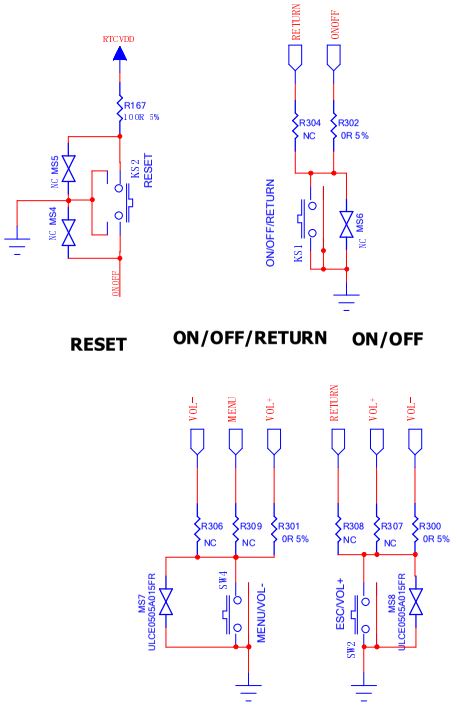

MIC

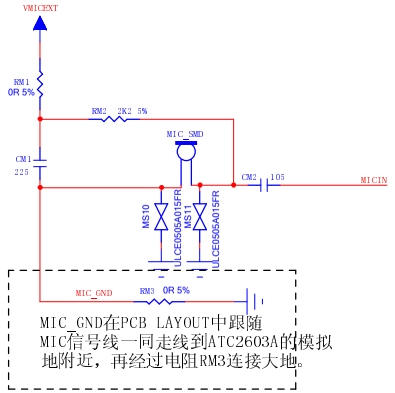

MMA7660/MC3230

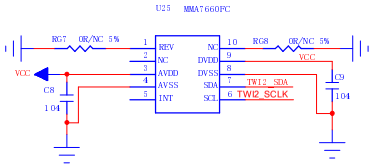

MMA7660,MC3230,MC3210 Pin to Pin:
When MMA7660, RC7 & RC8 is OR;
When MC3230,RC7 & RC8 is NC;

MMA7660 Slave Address:0x4c
MC3230 Slave Address:1001100b

G-Sensor

BMA220/222/250

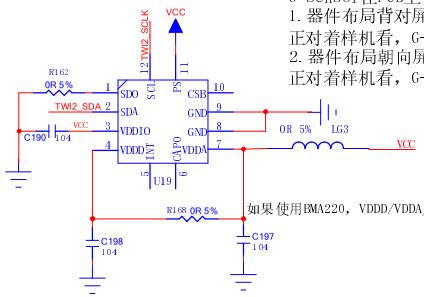

如果使用BMA220，VDDD/VDDA只能1.8V

BMA Slave Address:0001000b

G-Sensor在PCB上的摆放方向：
1. 器件布局背对屏的方向，
正对着样机看，G-Sensor的第1脚对着样机的左上角。
2. 器件布局朝向屏的方向，
正对着样机看，G-Sensor的第1脚对着样机的右上角。

ATM7021_V1.1_131202（TCH标案）.sch	
File name:	MISC&CAMERA
Sheet name:	
Drawing No:	Version: V1.0
Drawn By:	Date: 2013-12-2
Checked By:	Date:
Approved By:	Date:
Size: A3	Sheet: 9 12

RGB

9寸 800*480 CPT

RGB

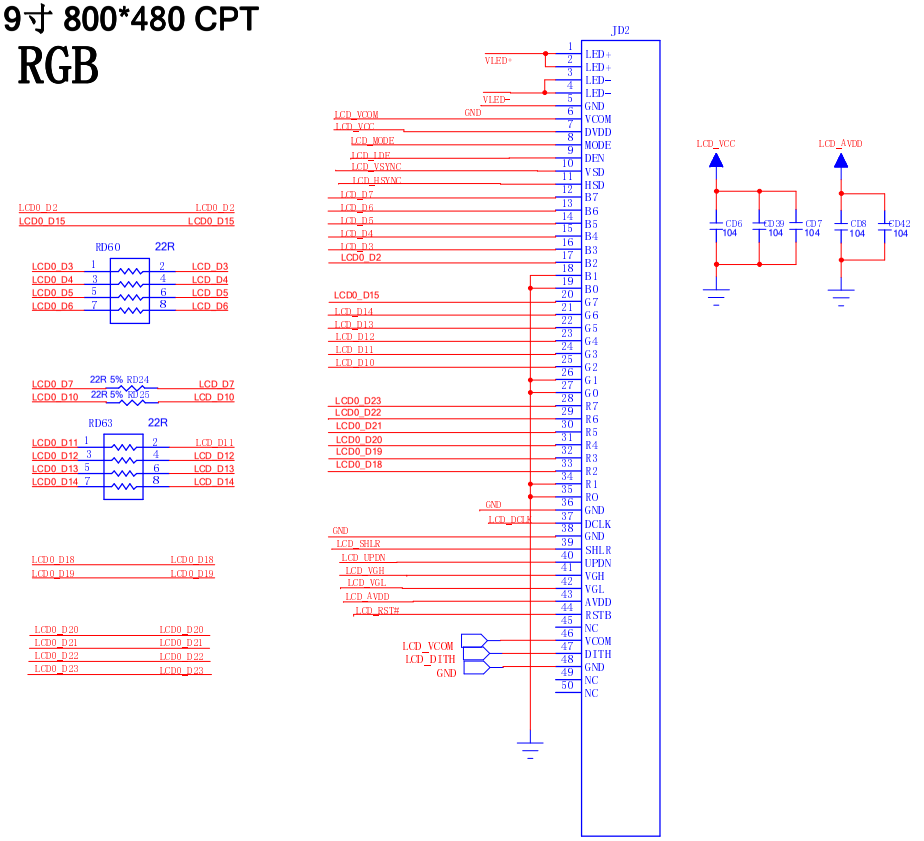

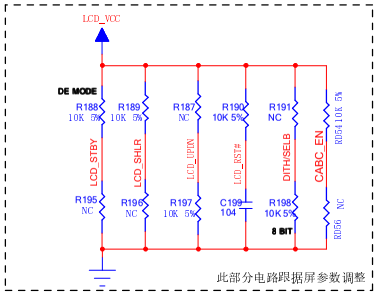

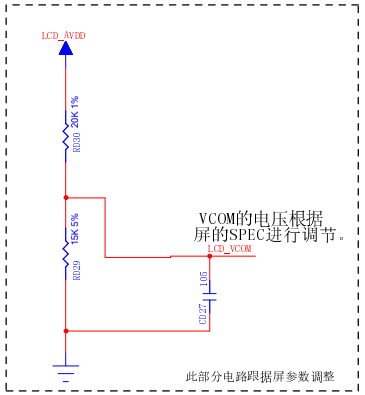

LCD POWER

LCD VCC

VGL/VGH

如果VGH升压过高，请注意修改CD19,CD22的耐压值

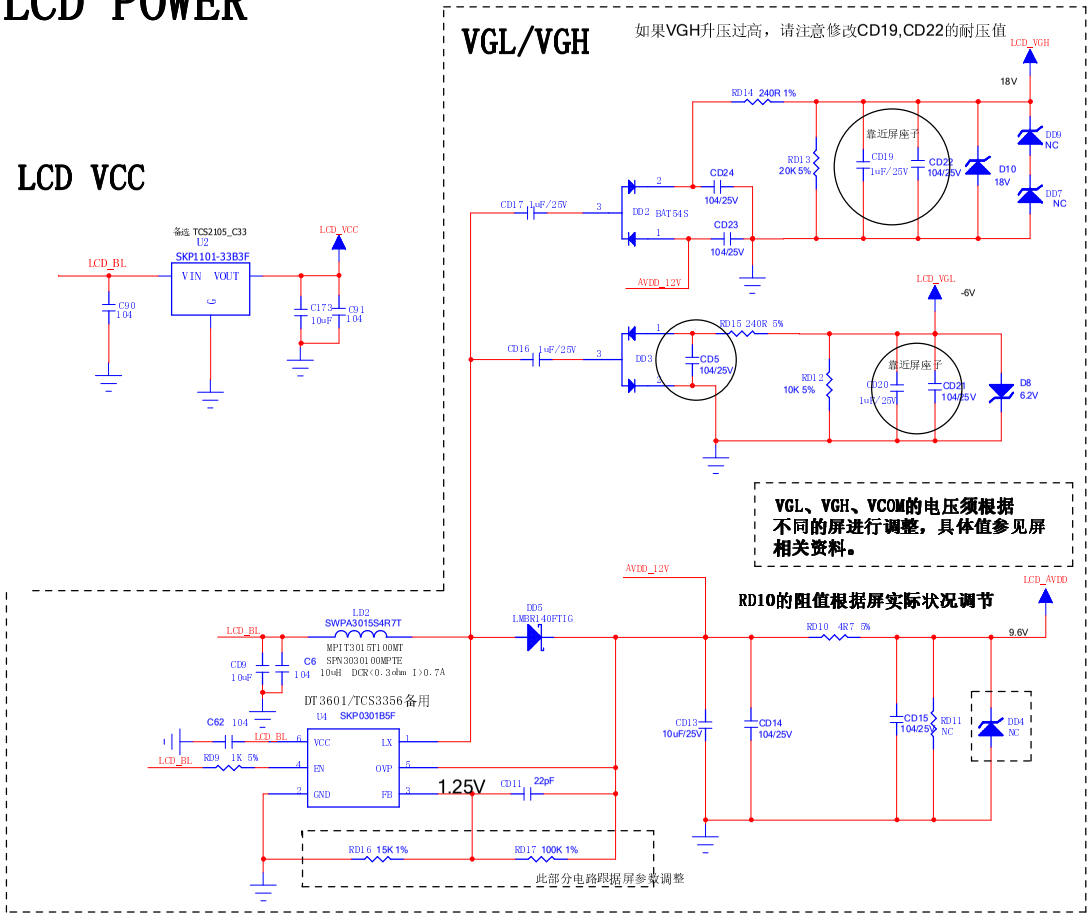

Back Light

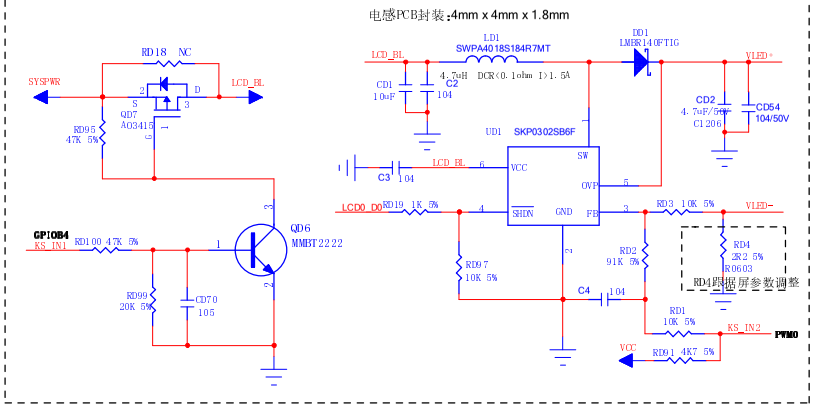

ATM7021_V1.1_131202（TCH标案）.sch	
File name: RGB&LCD POWER	
Sheet name:	
Drawing No:	Version: V1.0
Drawn By:	Date: 2013-12-2
Checked By:	Date:
Approved By:	Date:
Size: A3	Sheet: 10 12

CTP

CAMERA SENSOR

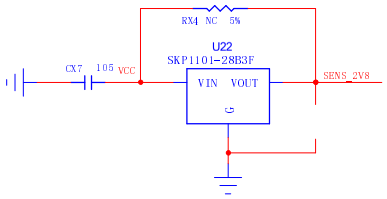

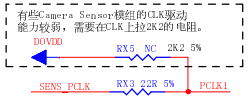

摄像头接口请根据其SPEC连接，制作PCB封装。
前置摄像头PWDN控制为SPIO_MISO，后置摄像头PWDN控制为SPIO_SS。

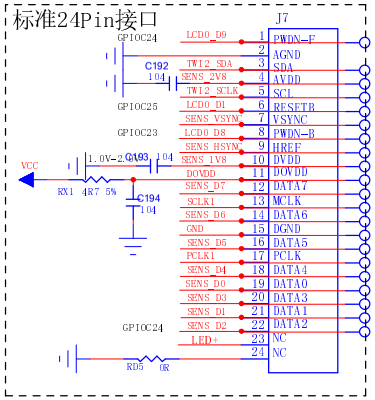

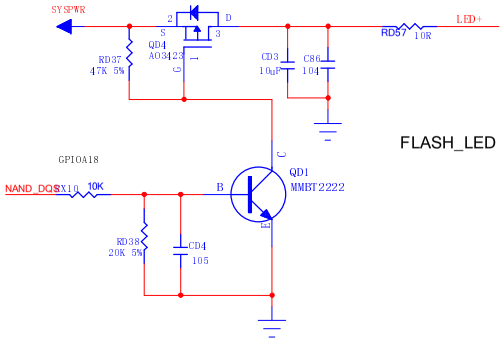

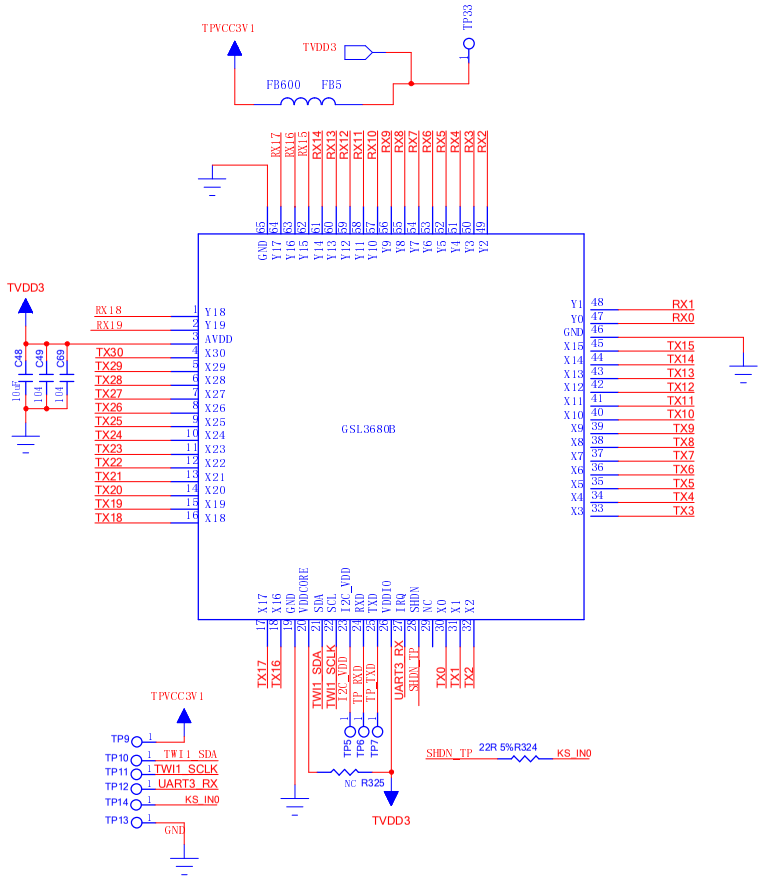

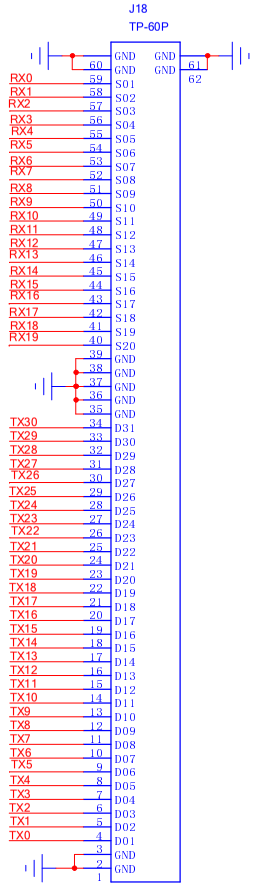

Title:	
Drawing No:	Version:
Drawn By:	Date:
Checked By:	Date:
Approved By:	Date:
Size A3	Sheet:

LVDS

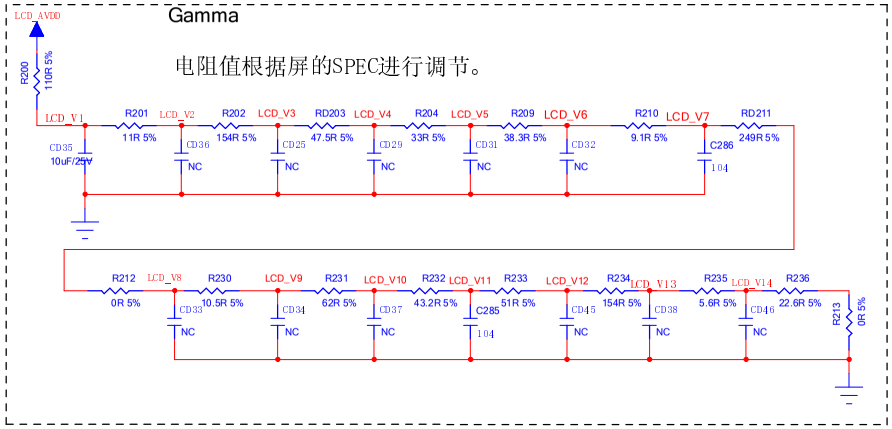

10.1寸 1024 x 600

BL101DS003-002

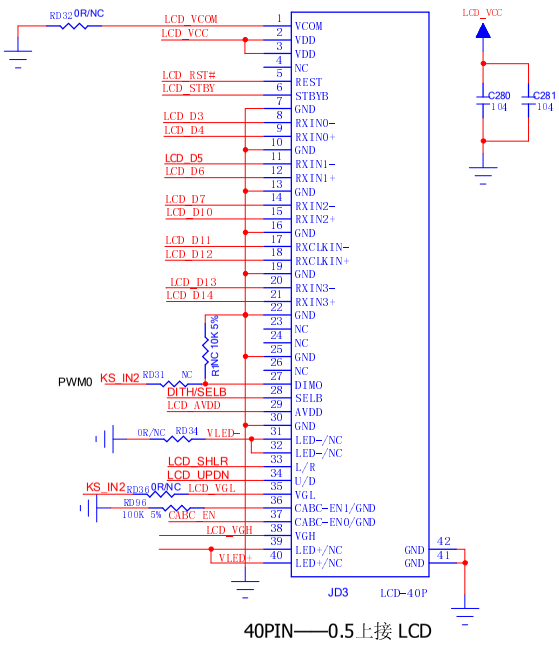

40PIN——0.5上接 LCD

WS101HD01-60

10.1寸 1024 x 600

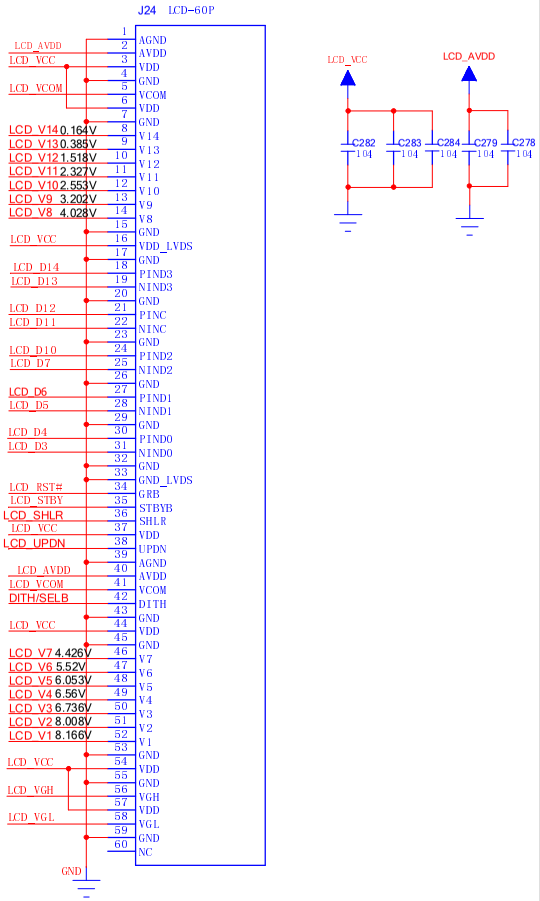

Backlight CONN

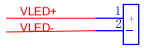

14. LVDS	
Title:	
Drawing No:	Version:
Drawn By:	Date:
Checked By:	Date:
Approved By:	Date:
Size A3	Sheet: